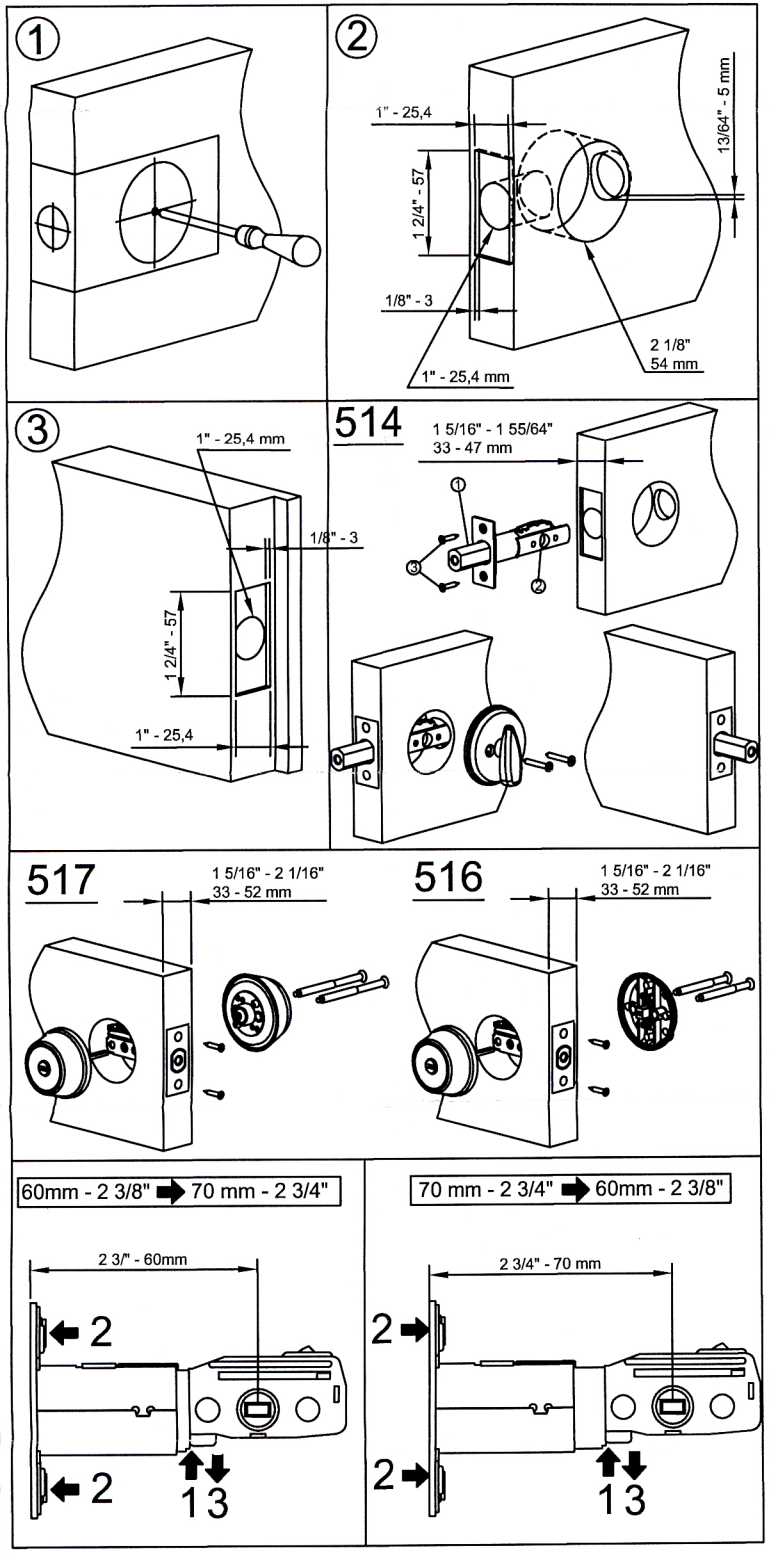
1
2
1" - 25,4
1 2/4" - 57
13/64" - 5 mm
1/8" - 3
2 1/8"
54 mm
1" - 25,4 mm
3
1" - 25,4 mm
1/8" - 3
1 2/4" - 57
1" - 25,4
514
1 5/16" - 1 55/64"
33 - 47 mm
517
1 5/16" - 2 1/16"
33 - 52 mm
516
1 5/16" - 2 1/16"
33 - 52 mm
60mm - 2 3/8" ➡ 70 mm - 2 3/4"
2 3/" - 60mm
2
2
13
70 mm - 2 3/4" ➡ 60mm - 2 3/8"
2 3/4" - 70 mm
2
2
13